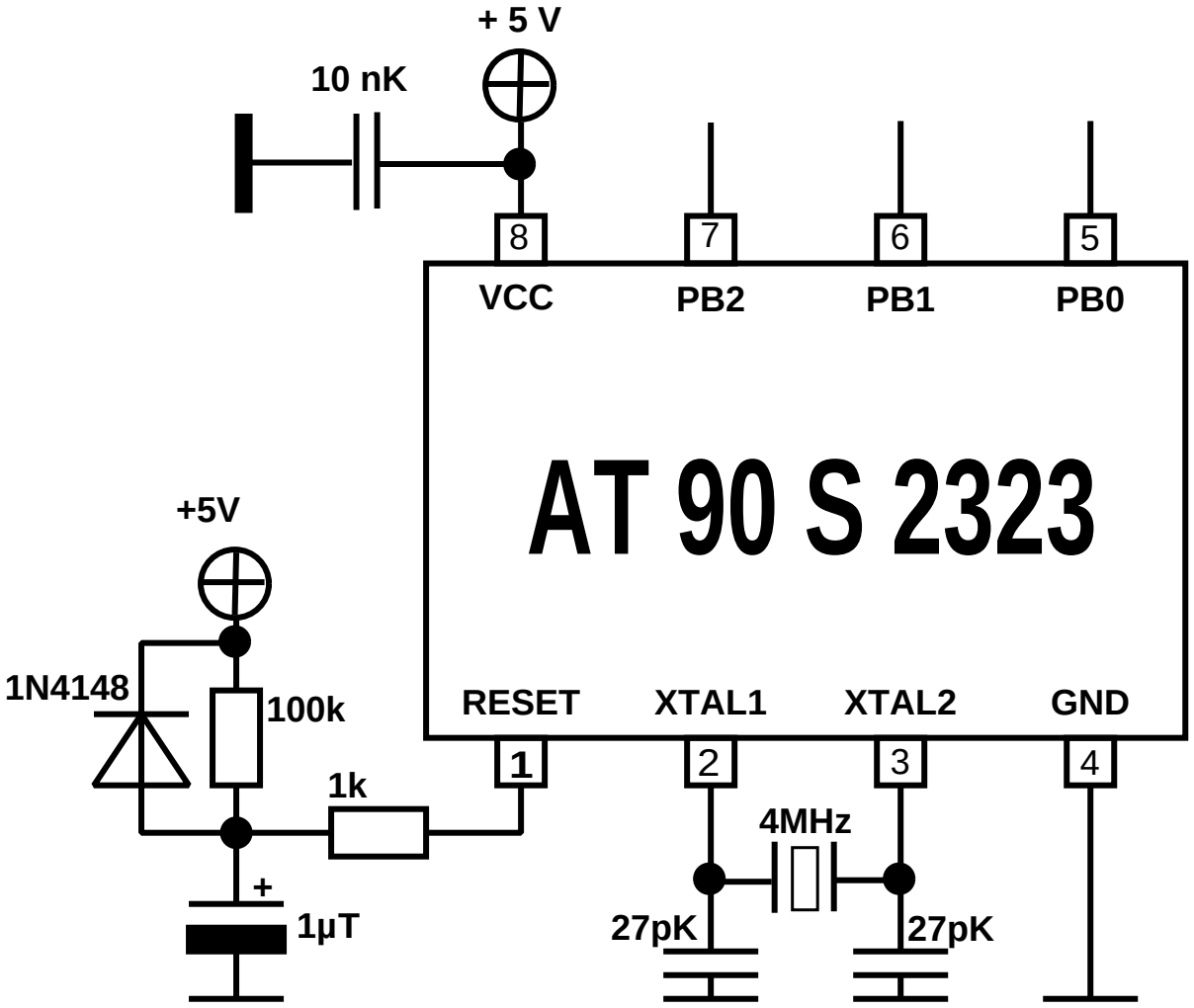
+ 5 V
10 nK
8
7
6
5
VCC
PB2
PB1
PB0
AT 90 S 2323
+5V
1N4148
100k
1k
RESET
XTAL1
XTAL2
GND
1
2
3
4
4MHz
+
1µT
27pK
27pK