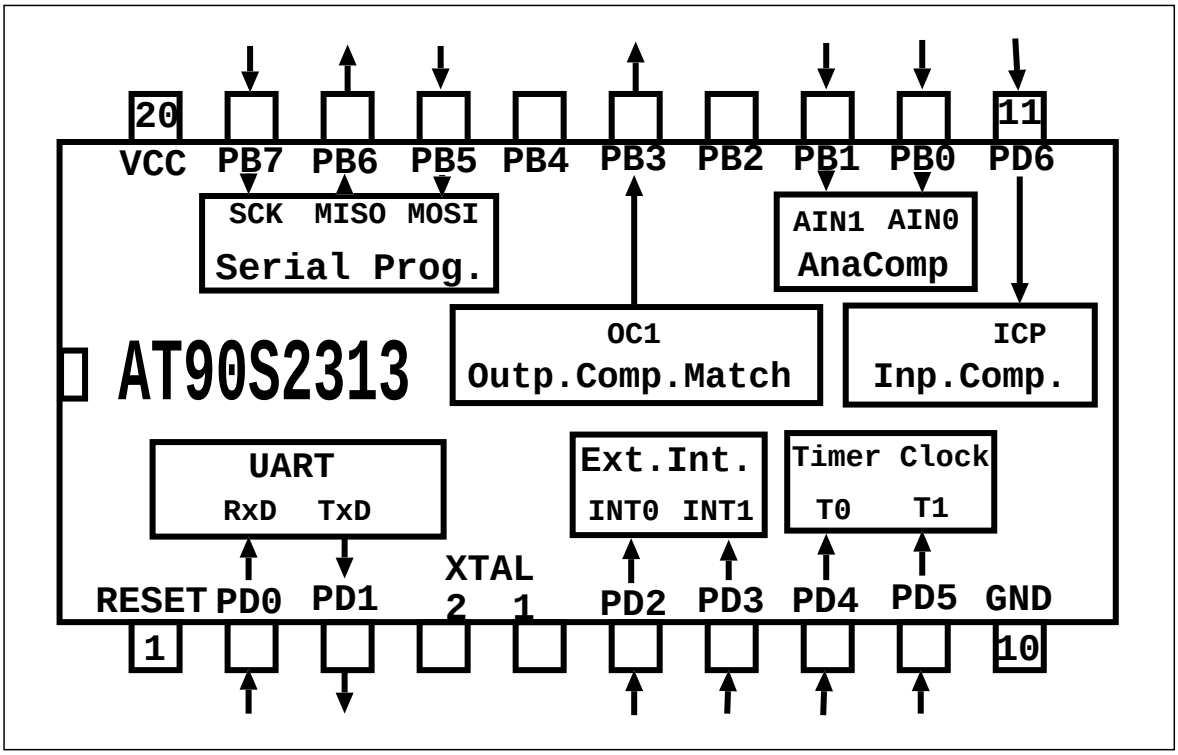
20
11
VCC
PB7
PB6
PB5
PB4
PB3
PB2
PB1
PB0
PD6
SCK MISO MOSI
Serial Prog.
AIN1 AIN0
AnaComp
AT90S2313
OC1
Outp.Comp.Match
ICP
Inp.Comp.
UART
RxD TxD
Ext.Int.
INT0 INT1
Timer Clock
T0 T1
RESET
PD0
PD1
XTAL
2 1
PD2
PD3
PD4
PD5
GND
1
10