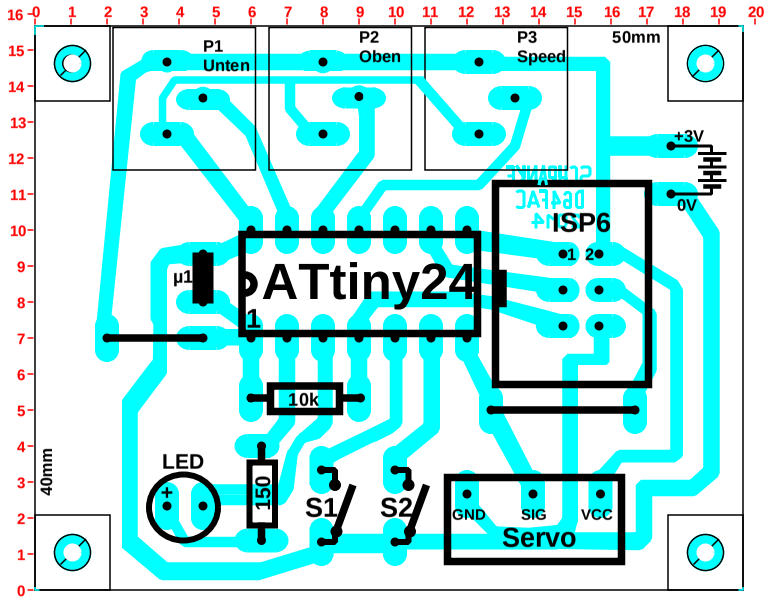
P1
Unten
P2
Oben
P3
Speed
50mm
40mm
+3V
0V
ISP6
1 2
ATtiny24
µ1
1
10k
LED
150
S1
S2
GND
SIG
VCC
Servo